Electrical Circuit

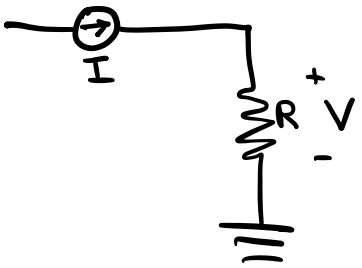

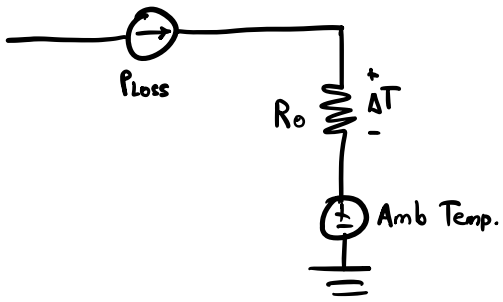

$$I = \frac{V}{R}$$

$$P_{Loss} = \frac{\Delta T}{\frac{L}{kA}} \longrightarrow R_{cond} = \frac{L}{kA}\left(\frac{^{o}C}{W}\right)$$
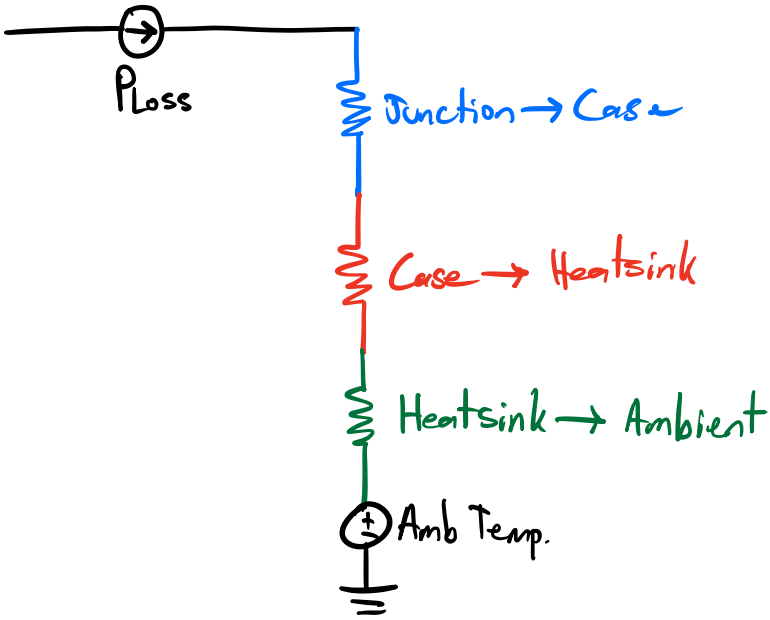
Mosfet Heat Design: